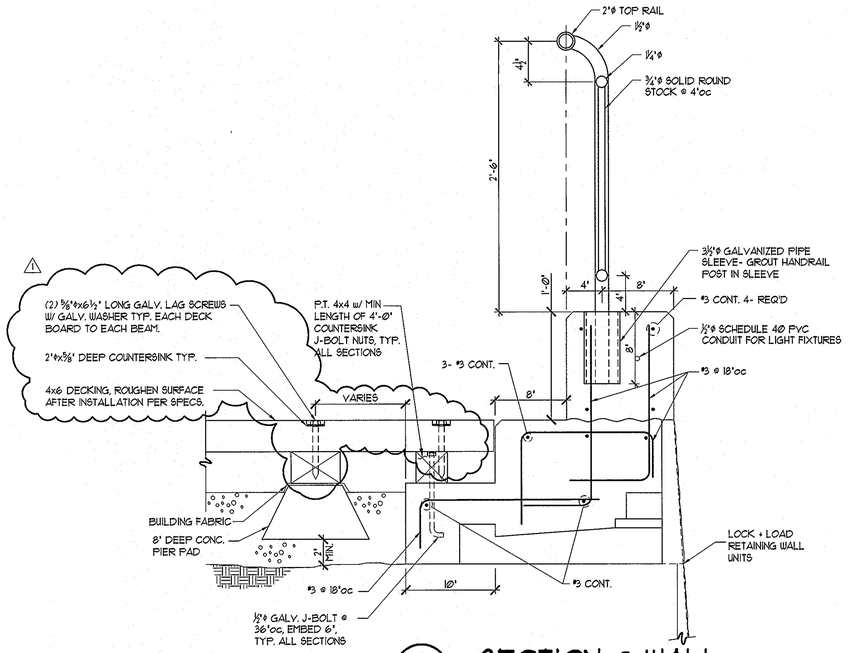

1 / S2 SECTION @ WALL

1 1/2"=1'-0"

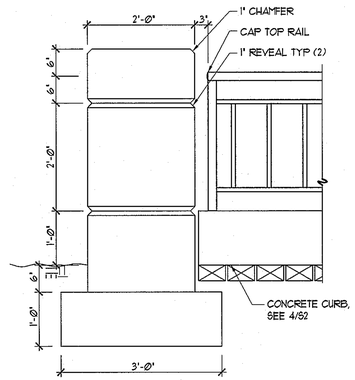

2 / S2 PILASTER DETAIL

3/4"=1'-0"

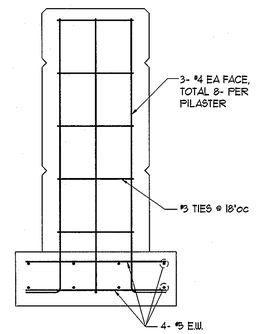

3 / S2 PILASTER SECTION

3/4"=1'-0"

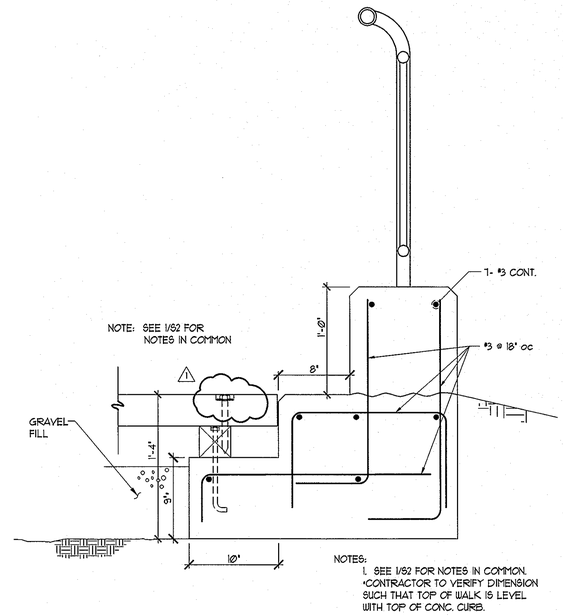

NOTES:
1. SEE 1/S2 FOR NOTES IN COMMON.
*CONTRACTOR TO VERIFY DIMENSION SUCH THAT TOP OF WALK IS LEVEL WITH TOP OF CONC. CURB.

4 / S2 CURB DETAIL

1 1/2"=1'-0"

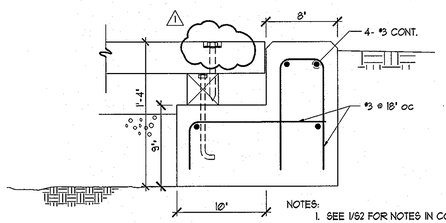

NOTES:
1. SEE 1/S2 FOR NOTES IN COMMON.
*CONTRACTOR TO VERIFY DIMENSION SUCH THAT TOP OF WALK IS LEVEL WITH TOP OF CONC. CURB.

5 / S2 CURB DETAIL

1 1/2"=1'-0"

REV. NO.	DATE
1	7-30-2010

JOSEPH C. GERLACH — STATE OF WASHINGTON — 21931 — PROFESSIONAL ENGINEER — 8/2/10

HDJ DESIGN GROUP PLLC
engineers landscape architects planners surveyors
6115 Burden Blvd, Suite E
Pasco, WA 99301-9930
509/547-1703
509/545-3468
509/547-5129 fax
Internet: www.hdjdesigngroup.com

CONCRETE DETAILS FOR:

CLOVER ISLAND WEST CAUSEWAY

A SITE LOCATED IN THE CITY OF KENNEWICK, WASHINGTON

DESIGNED:	SWJ
DRAWN:	CC
CHECKED:	DS
SCALE:	H: N/A V: N/A
	JUL 2010 2652
SHEET	S2

Plotted on Aug.2,2010 - 9:26 AM, Modified 8-2-10
H:\PROJECT-FILES\2007\07302 - CLOVER ISLAND CAUSEWAY\AUTOCAD FILES\CLOVER ISLAND SHORELINES\S2